بسم الله الرحمن الرحيم

King Abdulaziz University
Engineering College
Department of Production and Mechanical System Design

MENG 366 Automatic Control

Final Exam
Closed-book Exam
Saturday: 25/11/1424 H
Time Allowed: Two Hours

Name:	Sec. No.:	ID No.:

Question 1		10
Question 2		10
Question 3		10
Question 4		10
Question 5		10
TOTAL		50

إن اللهَ يُمْسِكُ السمَاوَاتِ وَالأَرْضَ أن تَزُولا وَلَئِن زَالَتَا إِنْ أَمْسَكَهُمَا مِنْ أَحَدٍ من بَعْدِهِ
إنهُ كَانَ حَليماً غَفُورا

Instructions

1. There are totally 5 problems in this exam.
2. Show all work for partial credit.
3. Assemble your work for each problem in logical order.
4. Justify your conclusion. I cannot read minds.

بسم الله الرحمن الرحيم

Automatic Control
MENG366
Final Exam

Closed Book Exam
Time: 1 Hour
Wednesday: 25/11/1424 H

1. Are these statements **true** or **false**?

	True	False
a. The initial value theorem relates the steady state behavior of $sF(s)$ in the neighborhood of s=0.	☐	■
b. In control theory, the transfer functions are commonly used to characterize the input-output relationship of linear time-invariant systems	■	☐
c. The transient response of a practical control system often exhibits damped oscillations before reaching a steady state.	■	☐
d. A linear time-invariant control system is stable if the output eventually comes back to its equilibrium state when the system is subjected to initial conditions.	■	☐
e. The open-loop poles are the roots of the characteristics equation.	☐	■
f. The main advantage of using the Bode plot is that multiplication of magnitudes can be converted into addition.	■	☐
g. Nyquist plot are polar plots, while Bode plots are rectangular plots.	■	☐
h. The Nyquist stability criterion determines the stability of an open-loop system from its closed-loop poles.	☐	■
i. If there is one clockwise encirclement of Nyquist contour of $G(s)H(s)$ of the $-1+0j$ point, the system is NOT stable.	■	☐
j. While conventional control theory is based on the transfer function, modern control theory is based on the description of system in state space.	■	☐

2. Consider the system shown in Figure (1)

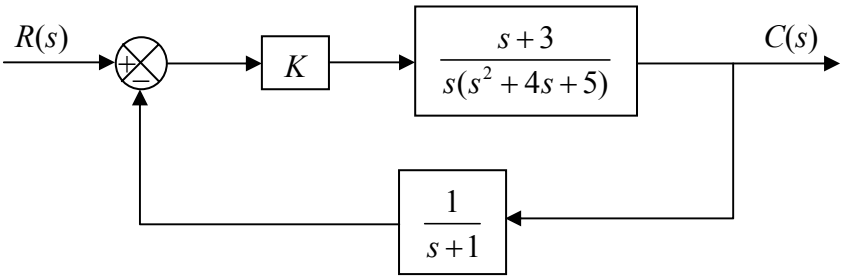

Figure (1)

a) Find the open-loop transfer function of the system.

The the open-loop transfer function of the system is $G(s)H(s)=\dfrac{K(s+3)}{s(s+1)(s^2+4s+5)}$

b) Find the closed-loop transfer function of the system.

The closed-loop transfer function of the system is:

$$\frac{G(s)}{1+G(s)H(s)}=\frac{\dfrac{K(s+3)}{s(s^2+4s+5)}}{1+\dfrac{K(s+3)}{s(s+1)(s^2+4s+5)}}=\frac{K(s+3)(s+1)}{s(s+1)(s^2+4s+5)+K(s+3)}$$

After simplifications:

$$\frac{G(s)}{1+G(s)H(s)}=\frac{K(s+3)(s+1)}{s^4+5s^3+9s^2+(5+K)s+3K}$$

c) Find the characteristics equation of the system.

The characteristics equation is $s^4+5s^3+9s^2+(5+K)s+3K=0$

d) Using *Routh's* stability criterion, determine all values of *K* for which the system is STABLE.

s^4	1	9	$3K$
s^3	5	$5+K$	
s^2	$\dfrac{40-K}{5}$	$3K$	
s	$(5+K)-\dfrac{75K}{40-K}$	0	
s^0	$3K$		

$$\frac{40-K}{5} > 0 \qquad \text{or,} \qquad K < 40$$

$$(5+K) - \frac{75K}{40-K} > 0 \qquad \text{or,} \qquad -44.49 < K < 4.49$$

$$3K > 0 \qquad \text{or,} \qquad K > 0$$

The stability condition is $0 < K < 4.49$

3. Obtain a state space representation of the mechanical system shown below in Figure (2) where u_1 and u_2 are inputs and y_1 and y_2 are outputs.

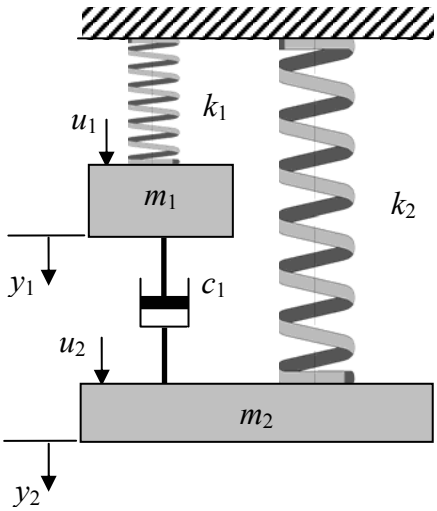

Figure (2)

Solutions:

$$\sum \vec{F} = m\vec{a}$$

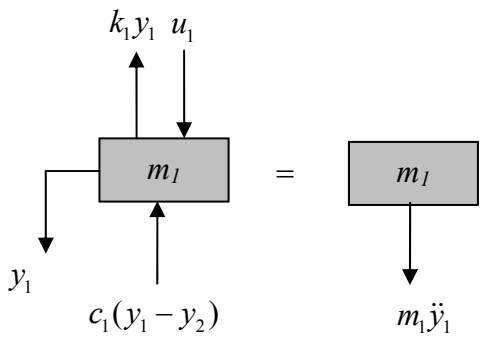

$$+k_1 y_1 + c_1(\dot{y}_1 - \dot{y}_2) - u_1 = -m_1\ddot{y}_1$$

$$m_1\ddot{y}_1 + c_1\dot{y}_1 + k_1 y_1 - c_1\dot{y}_2 = u_1$$

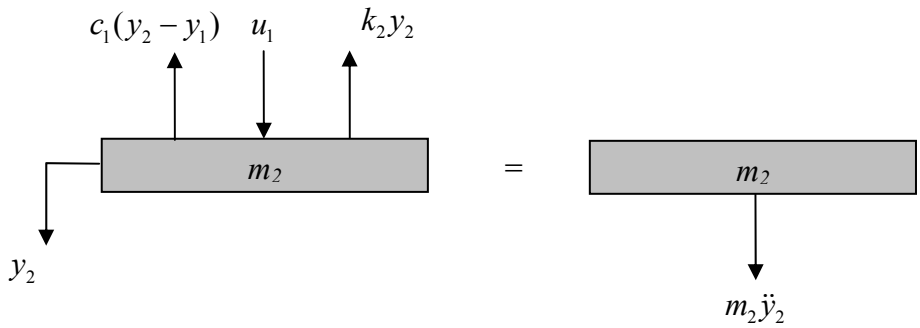

$$k_2 y_2 - c_1(\dot{y}_1 - \dot{y}_2) - u_2 = -m_2\ddot{y}_2$$
$$m_2\ddot{y}_2 + c_1\dot{y}_2 + k_2 y_2 - c_1\dot{y}_1 = u_2$$

Hence, the two equations of motion are:

$$m_1\ddot{y}_1 + c_1\dot{y}_1 + k_1 y_1 - c_1\dot{y}_2 = u_1$$
$$m_2\ddot{y}_2 + c_1\dot{y}_2 + k_2 y_2 - c_1\dot{y}_1 = u_2$$

state space variables

$x_1 = y_1 \quad x_2 = \dot{y}_1 \quad x_3 = y_2 \quad x_4 = \dot{y}_2$

state space equation

$$\begin{bmatrix} \dot{x}_1 \\ \dot{x}_2 \\ \dot{x}_3 \\ \dot{x}_4 \end{bmatrix} = \begin{bmatrix} 0 & 1 & 0 & 0 \\ -k_1 m_1^{-1} & -c_1 m_1^{-1} & 0 & c_1 m_1^{-1} \\ 0 & 0 & 0 & 1 \\ 0 & c_1 m_2^{-1} & -k_2 m_2^{-1} & -c_1 m_2^{-1} \end{bmatrix} \begin{bmatrix} x_1 \\ x_2 \\ x_3 \\ x_4 \end{bmatrix} + \begin{bmatrix} 0 & 0 \\ m_1^{-1} & 0 \\ 0 & 0 \\ 0 & m_2^{-1} \end{bmatrix} \begin{bmatrix} u_1 \\ u_2 \end{bmatrix}$$

$$\begin{bmatrix} y_1 \\ y_2 \end{bmatrix} = \begin{bmatrix} 1 & 0 & 0 & 0 \\ 0 & 0 & 1 & 0 \end{bmatrix} \begin{bmatrix} x_1 \\ x_2 \\ x_3 \\ x_4 \end{bmatrix} + 0 \begin{Bmatrix} u_1 \\ u_2 \end{Bmatrix} \qquad \text{(i.e. } [D] = 0\text{)}$$

Alternative method:

The two equations of motion can be rewritten in matrix form as follows:

$$\begin{bmatrix} m_1 & 0 \\ 0 & m_2 \end{bmatrix} \begin{Bmatrix} \ddot{y}_1 \\ \ddot{y}_2 \end{Bmatrix} + \begin{bmatrix} c_1 & -c_1 \\ -c_1 & c_2 \end{bmatrix} \begin{Bmatrix} \dot{y}_1 \\ \dot{y}_2 \end{Bmatrix} + \begin{bmatrix} k_1 & 0 \\ 0 & k_2 \end{bmatrix} \begin{Bmatrix} y_1 \\ y_2 \end{Bmatrix} = \begin{Bmatrix} u_1 \\ u_2 \end{Bmatrix}$$

Now define the following matrices:

$$[M] = \begin{bmatrix} m_1 & 0 \\ 0 & m_2 \end{bmatrix}, \qquad [\bar{C}] = \begin{bmatrix} c_1 & -c_1 \\ -c_1 & c_2 \end{bmatrix}, \qquad \text{and } [K] = \begin{bmatrix} k_1 & 0 \\ 0 & k_2 \end{bmatrix}$$

One can represent the state matrices as following:

$$[A] = \begin{bmatrix} [I] & [0] \\ -[M]^{-1}[\bar{C}] & -[M]^{-1}[K] \end{bmatrix}, \qquad [B] = \begin{bmatrix} [0] \\ -[M]^{-1} \end{bmatrix}, \ [C] = \begin{bmatrix} [0] & [I] \end{bmatrix}, \text{ and } [D]=0$$

$$[M]^{-1} = \frac{1}{m_1 m_2}\begin{bmatrix} m_2 & 0 \\ 0 & m_1 \end{bmatrix} = \begin{bmatrix} m_1^{-1} & 0 \\ 0 & m_2^{-1} \end{bmatrix}$$

$$[M]^{-1}[\bar{C}] = \begin{bmatrix} m_1^{-1} & 0 \\ 0 & m_2^{-1} \end{bmatrix}\begin{bmatrix} c_1 & -c_1 \\ -c_1 & c_2 \end{bmatrix} = \begin{bmatrix} c_1 m_1^{-1} & -c_1 m_1^{-1} \\ -c_1 m_2^{-1} & c_2 m_2^{-1} \end{bmatrix}$$

$$[M]^{-1}[K] = \begin{bmatrix} m_1^{-1} & 0 \\ 0 & m_2^{-1} \end{bmatrix}\begin{bmatrix} k_1 & 0 \\ 0 & k_2 \end{bmatrix} = \begin{bmatrix} k_1 m_1^{-1} & 0 \\ 0 & k_2 m_2^{-1} \end{bmatrix}$$

$$[A] = \begin{bmatrix} 1 & 0 & 0 & 0 \\ 0 & 1 & 0 & 0 \\ -c_1 m_1^{-1} & c_1 m_1^{-1} & -k_1 m_1^{-1} & 0 \\ c_1 m_2^{-1} & -c_2 m_2^{-1} & 0 & -k_2 m_2^{-1} \end{bmatrix},$$

$$[B] = \begin{bmatrix} 0 & 0 \\ 0 & 0 \\ m_1^{-1} & 0 \\ 0 & m_2^{-1} \end{bmatrix}, [C] = \begin{bmatrix} 0 & 0 & 1 & 0 \\ 0 & 0 & 0 & 1 \end{bmatrix}$$

$$[D] = 0$$

4. Referring to the system shown in Figure (3), determine the values of K_1 and K_2 such that maximum overshoot will be 4.6 % and settling time will be 1.5 second (2% percent criteria).

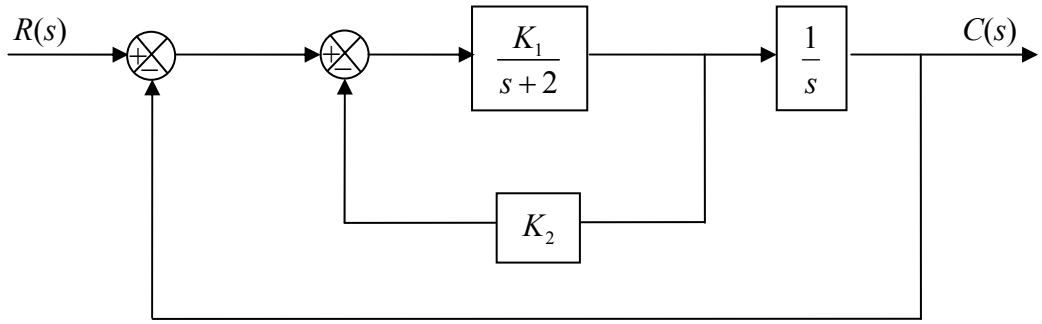

Figure (3)

Solution:

$$\frac{C(s)}{R(s)} = \frac{K_1}{s^2 + (2 + K_1 K_2)s + K_1}$$

$$M_P = e^{-\frac{\pi\zeta}{\sqrt{1-\zeta^2}}} = 0.046 \quad \Rightarrow \quad \zeta = 0.7$$

$$t_s = \frac{4}{\zeta\omega_n} = 1.5 \quad \Rightarrow \quad \omega_n = 3.8$$

$$K_1 = \omega_n^2 = 3.8^2 = 14.51$$

$$2 + K_1 K_2 = 2\zeta\omega_n = 2(0.7)(3.8) = 6.46 \quad \Rightarrow \quad K_2 = 0.3$$

5. **Consider the following equation of motion of a mechanical system:**

$$\ddot{y}+5\dot{y}+6y=\dot{u}+6u$$

a) **Determine the transfer function** $Y(s)/U(s)$ **of the system.**

Solution:

Take Lablace for both sides:

$Ys^2+5Ys+6Y=Us+6U$

$$\frac{Y(s)}{U(s)}=\frac{s+6}{s^2+5s+6}$$

b) **Obtain the state space representation of the system in controllable canonical form.**

Solution:

$\ddot{y}+5\ \dot{y}+6\ \ y=0\ \ddot{u}+\ \ \dot{u}+6\ \ u$

$\ddot{y}+a_1\dot{y}+a_2y=b_0\ddot{u}+b_1\dot{u}+b_2u$

Controllable canonical form

$$\begin{bmatrix}\dot{x}_1\\ \dot{x}_2\end{bmatrix}=\begin{bmatrix}1 & 0\\ -6 & -5\end{bmatrix}\begin{bmatrix}x_1\\ x_2\end{bmatrix}+\begin{bmatrix}0\\ 1\end{bmatrix}u$$

$$y=\begin{bmatrix}6 & 1\end{bmatrix}\begin{bmatrix}x_1\\ x_2\end{bmatrix}+0\ u$$

c) **Is the system completely state controllable? Why?**

Solution:

Controllability matrix:

$$\begin{bmatrix}B & AB\end{bmatrix}=\begin{bmatrix}0 & 0\\ 1 & 5\end{bmatrix}$$

Since the controllability matrix is of rank 1, then the system is not completely state controllable.

d) **Is the system completely state observable? Why?**

Solution:

Observability matrix:

$$\begin{bmatrix}C^* & A^*C^*\end{bmatrix}=\begin{bmatrix}6 & 0\\ 1 & -5\end{bmatrix}$$

Since the observability matrix is of rank 2, then the system is completely state observable.